REVISIONS				
ZONE	REV.	DESCRIPTION	DATE	APPROVED

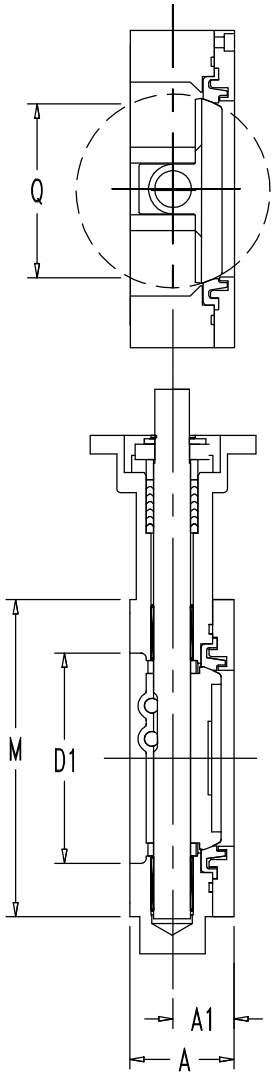

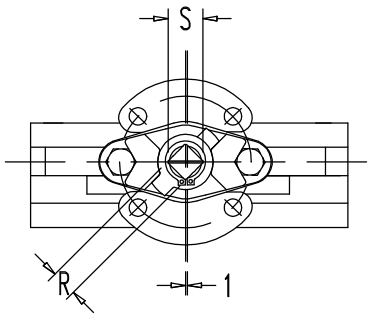

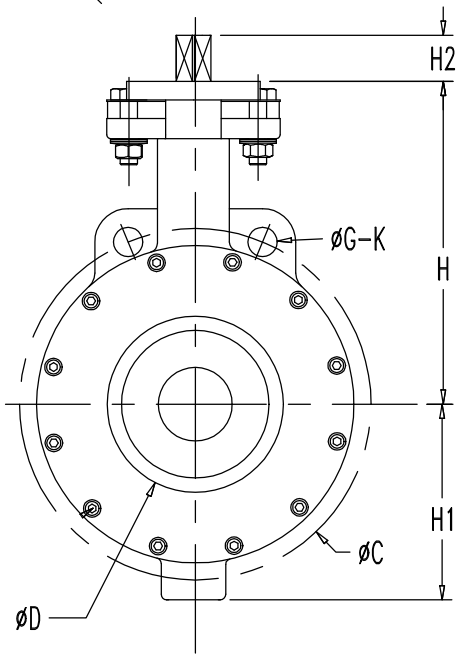

DIMENSIONS (in/mm)

ANSI DN	ISO	A	A1	C	D	D1	G	K	H	H1	H2	M	Q	R	S
2"	F07	1.81	1.14	4.75	1.81	2.28	0.67	2	5.00	2.56	1.22	3.62	1.80	0.43	0.55
50		46	29	120.7	46	58	17		127	65	31	92	45.75	11	14
2.5"	F07	1.93	1.06	5.50	2.32	2.72	0.67	2	5.51	3.35	1.18	4.13	1.97	0.43	0.56
65		49	27	139.5	59	69	17		140	85	30	105	50.13	11	14.1
3"	F07	2.01	1.18	6.00	2.87	3.31	0.67	2	5.91	3.74	1.30	5.00	2.80	0.55	0.71
80		51	30	152.4	73	84	17		150	95	33	127	71	14	18
4"	F07	2.22	1.32	7.50	3.76	4.17	0.71	2	6.89	4.17	0.98	6.18	3.71	0.55	0.74
100		56.5	33.5	190.5	95.5	106	18		175	106	25	157	94.19	14	18.8
5"	F10	2.32	1.34	8.50	4.37	4.72	0.81	2	7.87	5.35	1.30	7.32	4.21	0.55	0.74
125		59	34	215.9	111	120	20.5		200	136	33	186	106.88	14	18.8
6"	F10	2.36	1.38	9.50	5.59	6.06	0.79	2	8.46	5.94	1.36	8.50	5.53	0.55	0.74
150		60	35	241.5	142	154	20		215	151	34.5	216	140.36	14	18.8
8"	F10	2.56	1.50	11.75	7.48	7.95	0.81	2	9.65	7.38	1.32	10.67	7.48	0.75	1.02
200		65	38	298.5	190	202	20.5		245	187.4	33.6	271	189.97	19	26
10"	F12	2.83	1.65	14.25	9.29	9.76	0.93	2	11.34	8.54	2.68	12.76	9.29	0.87	1.18
250		72	42	362	236	248	23.5		288	217	68	324	236.00	22	30
12"	F12	3.27	1.85	17.00	11.11	11.65	1.00	2	12.99	10.16	2.70	15.00	11.08	1.06	1.42
300		83	47	431.8	282.2	296	25.4		330	258	68.5	381	281.33	27	36

MATERIALS

BODY	A351 CF8M
DISC	A351 CF8M
SEAT	RTFE / PTFE / TFM1700
STEM	17-4 PH / 316 SS
PACKING	PTFE

UNLESS OTHERWISE SPECIFIED:

DIMENSIONS ARE IN INCHES
TOLERANCES:
FRACTIONAL ±
ANGULAR: MACH ± BEND ±
TWO PLACE DECIMAL ±
THREE PLACE DECIMAL ±

INTERPRET GEOMETRIC TOLERANCING PER:

MATERIAL

FINISH

DO NOT SCALE DRAWING

	NAME	DATE
DRAWN	SE	12/1/16
CHECKED		
ENG APPR.		
MFG APPR.		
Q.A.		

COMMENTS:

DELTATPRODUCTS

TITLE: 2-12" 850 SERIES CF8M WAFER CL150 HP BFV DIMENSIONS

SIZE	DWG. NO.	REV
B	2-12 850 SERIES	0

SCALE: WEIGHT: SHEET 1 OF 1